DIMENSIONS (FOR REFERENCE ONLY)	INCH	MM
OVERALL LENGTH (LEFT TO RIGHT)	25.87	657.1
OVERALL WIDTH (FRONT TO BACK)	20.93	531.6
OVERALL HEIGHT	24.24	615.7
INSIDE LENGTH (LEFT TO RIGHT)	22.87	580.9
INSIDE WIDTH (FRONT TO BACK)	17.93	455.4
INSIDE HEIGHT	22.30	566.4
INSIDE 'B' HEIGHT	5.12	130.0
INSIDE 'A' HEIGHT	17.8	436.4

** ALTERNATIVE HARDWARE IS AVAILABLE FOR "**" ITEMS.

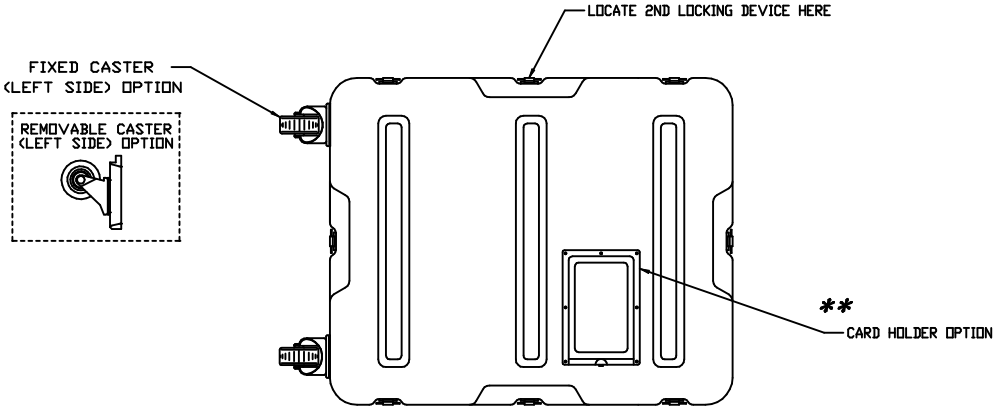

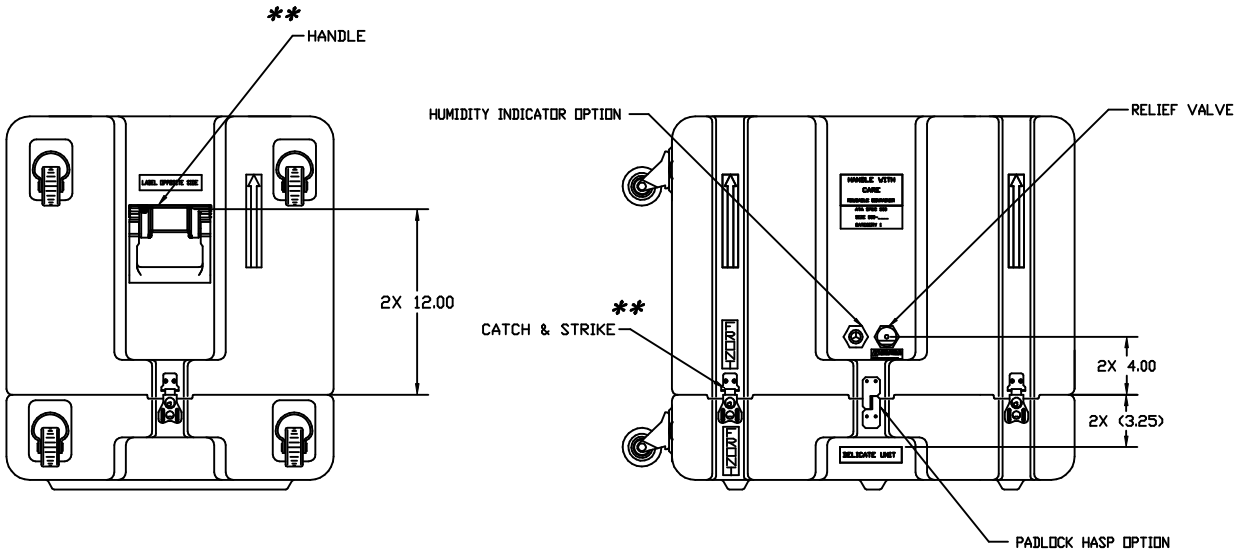

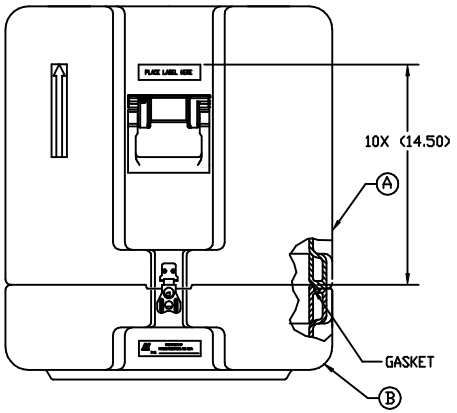

NOTE:
THIS DRAWING REPRESENTS HARDIGG'S STANDARD CASE OPTIONS, LOCATED IN STANDARD LOCATIONS. IF ALTERNATIVE OPTIONS OR LOCATIONS ARE REQUIRED, HARDIGG MUST QUOTE SEPARATELY.

HARDIGG INDUSTRIES, INC.
SOUTH DEERFIELD, MASSACHUSETTS 01373

TITLE
STANDARD CONFIGURABLE CASE

CAGE	DWG. NO.
11214	2318-1705R

REV.	DRAWN BY	DATE	SHEET
A	DAVE AMIDSZ	02FEB94	1 OF 1

THIS DRAWING AND ALL COPIES AND THE DESIGN AND DATA SHOWN ARE THE PROPERTY OF HARDIGG INDUSTRIES, INC. SO. DEERFIELD, MA U.S.A. AND INCLUDE PROPRIETARY INFORMATION. THE BORROWER BY RECEIPT OR RETENTION OF THE DRAWING AGREES THAT, EXCEPT AS EXPRESSLY AUTHORIZED IN WRITING BY HARDIGG INDUSTRIES, INC. IT WILL (1) NOT USE THE DRAWING OR ANY COPY OF THE DESIGN OR DATA SHOWN (2) NOT REPRODUCE, COPY, EXCERPT, EXHIBIT OR DISTRIBUTE THE DRAWING OR ANY COPY FOR USE BY OTHERS AND (3) UPON DEMAND RETURN THE DRAWING, AND ALL COPIES AND MATERIAL COPIED THEREFROM.

DWG. NO. 2318-1705R