DIMENSIONS (FOR REFERENCE ONLY)	INCH	MM
OVERALL LENGTH (LEFT TO RIGHT)	53.12	1349.2
OVERALL WIDTH (FRONT TO BACK)	43.00	1092.2
OVERALL HEIGHT	19.06	484.1
INSIDE LENGTH (LEFT TO RIGHT)	50.12	1273
INSIDE WIDTH (FRONT TO BACK)	40.00	1016
INSIDE HEIGHT	15.87	403.1
INSIDE BASE HEIGHT	12.12	307.8
INSIDE LID HEIGHT	3.75	95.25

** ALTERNATIVE HARDWARE IS AVAILABLE FOR "**" ITEMS.

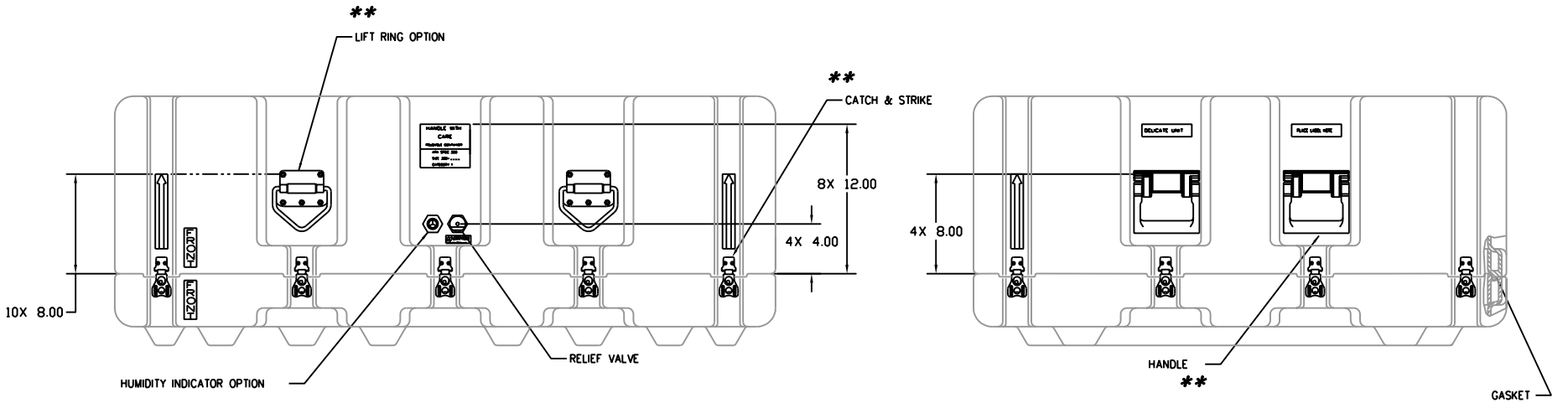

NOTE:
THIS DRAWING REPRESENTS HARDIGG'S STANDARD CASE OPTIONS, LOCATED IN STANDARD LOCATIONS. IF ALTERNATIVE OPTIONS OR LOCATIONS ARE REQUIRED, HARDIGG MUST QUOTE SEPARATELY.

HARDIGG INDUSTRIES, INC.
SOUTH DEERFIELD, MASSACHUSETTS 01373

TITLE: STANDARD CONFIGURABLE CASE

CAGE	DWG. NO.
11214	5040-1204R

REV.	DRAWN BY:	DATE	SHEET
—	JACK SIMATEK	07/07/03	1 OF 2

THIS DRAWING AND ALL COPIES AND THE DESIGN AND DATA SHOWN ARE THE PROPERTY OF HARDIGG INDUSTRIES, INC. SO. DEERFIELD, MA U.S.A. AND INCLUDE PROPRIETARY INFORMATION. THE BORROWER BY RECEIPT OR RETENTION OF THE DRAWING AGREES THAT, EXCEPT AS EXPRESSLY AUTHORIZED IN WRITING BY HARDIGG INDUSTRIES, INC. IT WILL (1) NOT USE THE DRAWING OR ANY COPY OF THE DESIGN OR DATA SHOWN (2) NOT REPRODUCE, COPY, EXCERPT, EXHIBIT OR DISTRIBUTE THE DRAWING OR ANY COPY FOR USE BY OTHERS AND (3) UPON DEMAND RETURN THE DRAWING, AND ALL COPIES AND MATERIAL COPIED THEREFROM.

5040-1204R

** ALTERNATIVE HARDWARE IS AVAILABLE FOR "**" ITEMS.

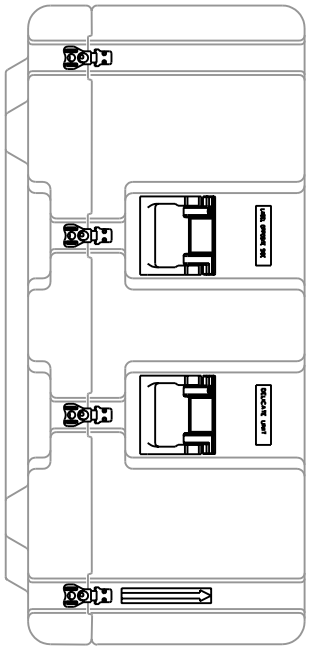

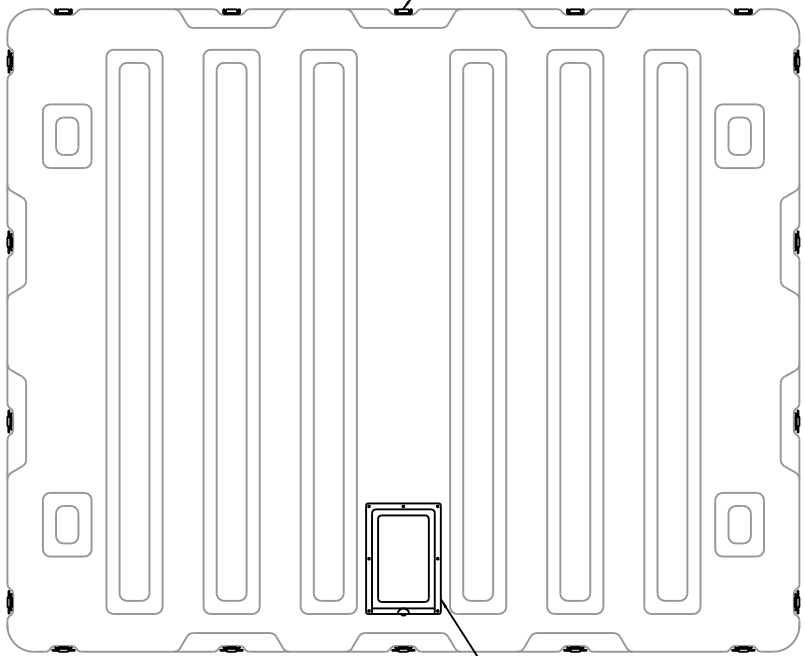

DWG. NO. 5040-1204R

COMPUTER GRAPHICS DRAWING
CHANGES TO THIS DRAWING MUST BE INCORPORATED IN THE COMPUTER GRAPHICS SYSTEM

CAGE	DWG. NO.	REV.
D 11214	5040-1204R	—
PROJ. NO. CONFIG	SHT 2 OF 2	